HEAT TREATMENT AND FINAL FINISH
- PHOSPHATE BLACK (SEE NOTE)

PHYSICAL PROPERTIES		JUNE 1, 1934 REVISIONS			
Y. P.		12	4-19-43		
T. S.					
EL. 2					
RED					
BR.					
ROCK.					
SCL.					

DRG. PERTAINS TO	
D7052	MOUNT, TRIPOD
	MACHINE GUN
	CAL. 30, M2

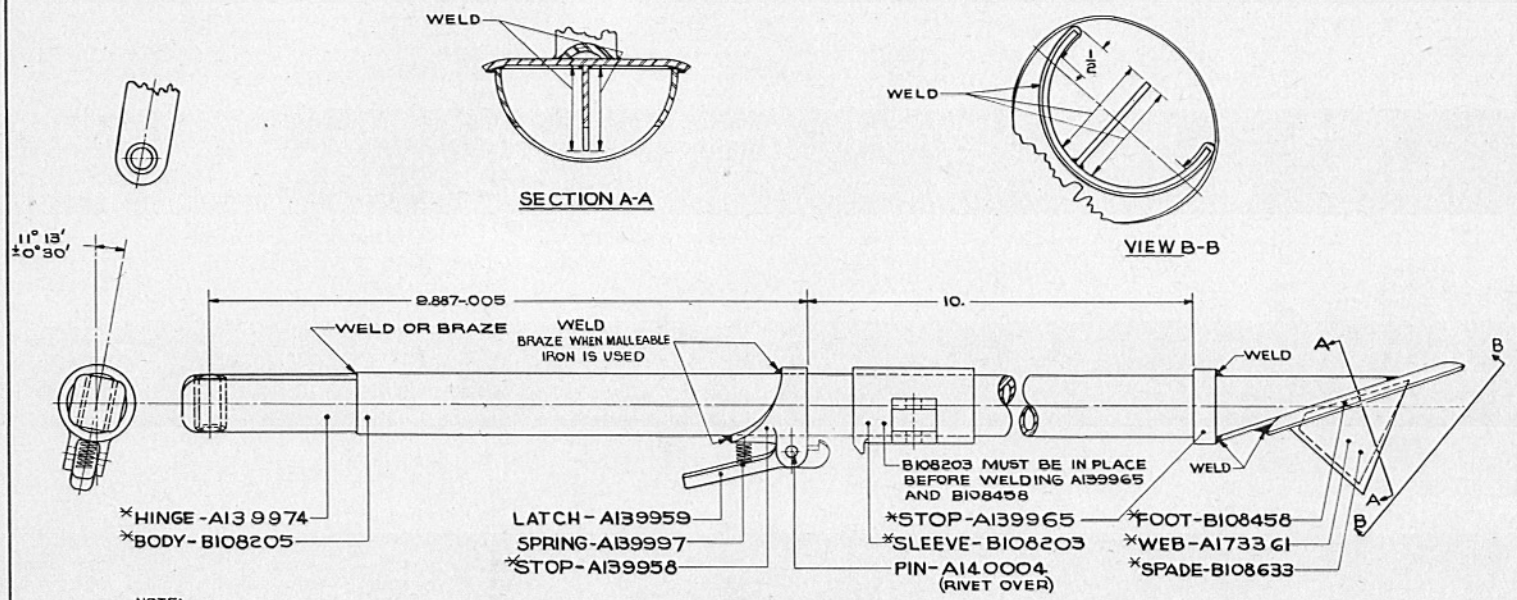

NOTE:
ASSEMBLE LATCH A-139959, SPRING A139997, AND PIN-A140004 AFTER APPLYING PHOSPHATE BLACK TO ASSEMBLY.

LEG, REAR, RIGHT, ASSEMBLY (C-59337-2

*WILL NOT BE ISSUED FOR FIELD MAINTENANCE EXCEPT AS COMPONENTS OF AUTHORIZED ASSEMBLIES

0 1 2 3 4 5 6 7 8 9 10 11 INCHES

RETRACED FROM OLD TRACING WITHOUT CHANGE 9-29-43

FOR ALTERNATIVE CONSTRUCTION SEE C59337A AND C59337B

C59337

TOLERANCE ON DIMENSIONS NOT OTHERWISE SPECIFIED
DECIMAL ±
FRACTIONAL ± 1/32
ANGULAR ±

DRAFTSMAN	TRACER	L.D.D. DRAFTSMAN
W.L.	H.N.S.	A.H.R.
CHECKER		CHIEF DRAFTSMAN

SUBMITTED: A.H. Roe

APPROVED BY ORDER OF THE CHIEF OF ORDNANCE
CAPT. ORD. DEPT. U.S.A.

ORDNANCE DEPT., U. S. A.
MADE AT ROCK ISLAND ARSENAL

A139958

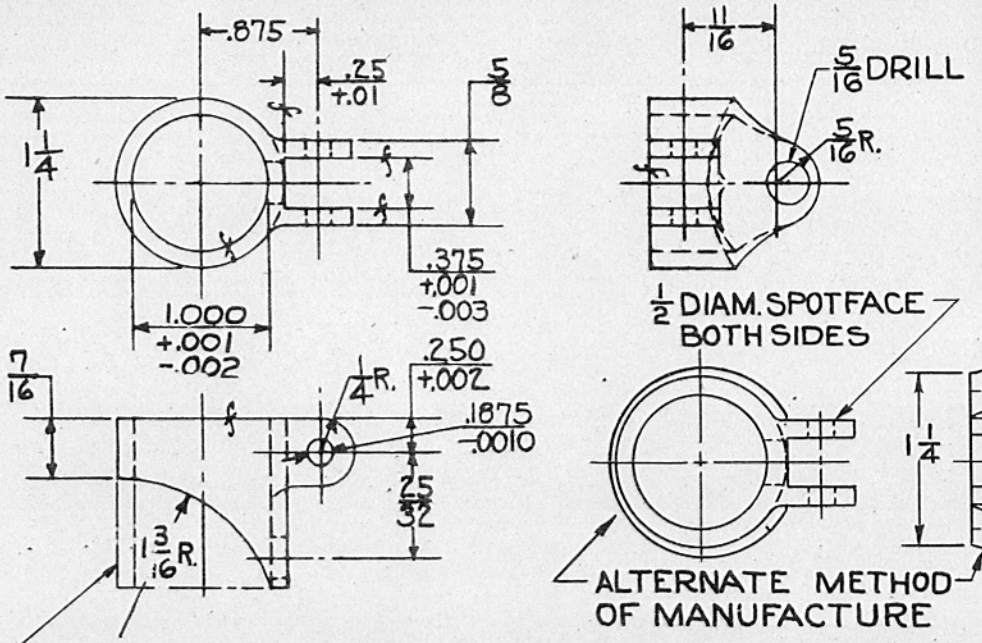

STOP, SLIDING SLEEVE, RIGHT

STEEL WD1035

MANUFACTURING COMPONENT

TOLERANCE $\frac{+1/64}{-1/64}$ ALLOWED ON ALL DIMENSIONS UNLESS OTHERWISE SPECIFIED.

NOTE: FOR OTHER ALT. METHOD OF MFR. SEE A139958A

SCALE 1

A139958

PHYSICAL PROPERTIES	
Y. P.	
T. S.	
EL.-2	
RED.	
HT. T.	
BR.	
SCL.	
C. C.	

JUNE 1, 1934

REVISIONS

1²	9-20-41		
2'	1-19-42		
3'	3-25-42		
4'	10-8-42		
5²	4-19-43		

DRG. PERTAINS TO

C59337	REAR LEG, RIGHT
D7052	MOUNT, TRIPOD, MACH. GUN, CAL..30, M2
C59337A	REAR LEG RIGHT
C59337B	REAR LEG RIGHT

SYMBOL

AAS512

DRAFTSMAN	TRACER	L'D'G. DRAFTSMAN
Mac.		
CHECKER C.A.C.	H.B.H.	CHIEF DRAFTSMAN

SUBMITTED:

1ST LIEUT., ORD. DEPT., U. S. A.

APPROVED:

MAJOR, ORD. DEPT., U. S. A.

ORD. OFFICE, WAR DEPT.

A 139959

HEAT TREATMENT & FINAL FINISH	PHYSICAL PROPERTIES					
HEAT TREAT FINISH TYPE II CLASS B	Y. P.		RED.		SCL.	
	T. S.		BR.			
	EL. 2		ROCK	C 30-35		

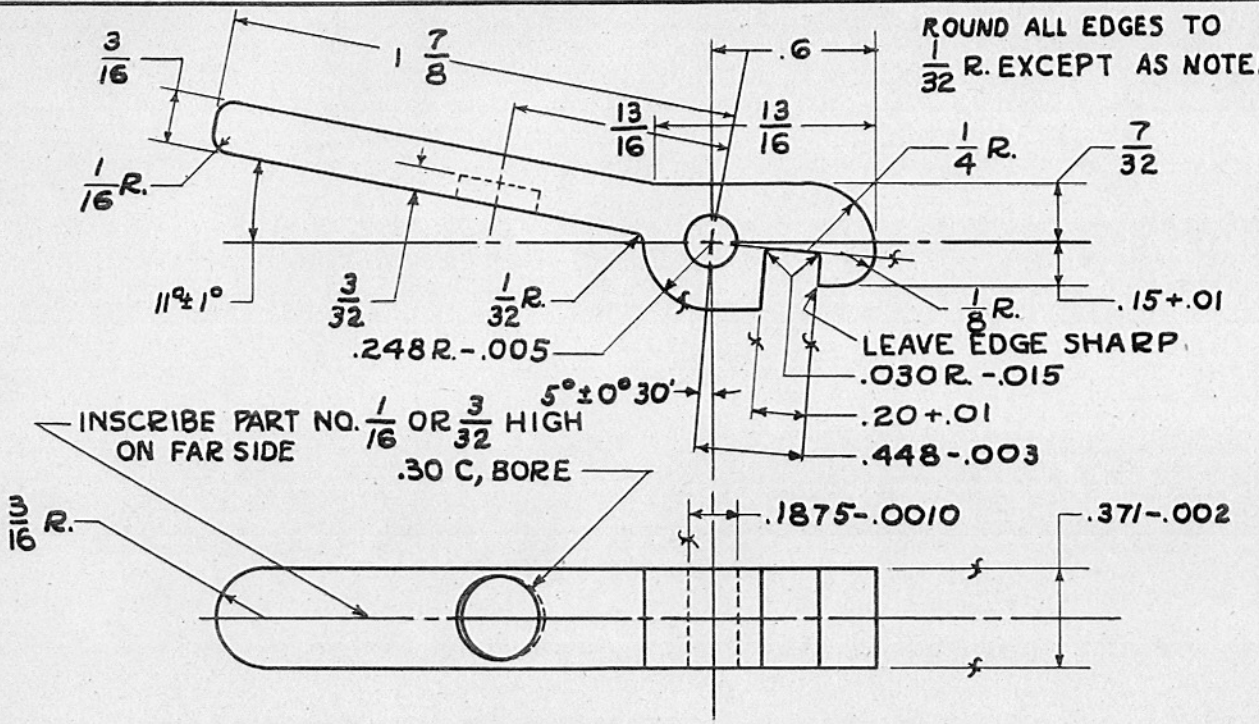

LATCH, SLEEVE

STEEL WD 1045 (A139959)

NOTE:
FOR ALT. CONSTRUCTION
SEE A139959A

SUPERSEDES OLD TRACING A139959
UNDER REVISION DATE OF 1-11-45.

SCALE 2/1

A 139959

JUNE 1, 1934

REVISIONS

10	1-11-45		

DRG. PERTAINS TO

D7052	MT. TRIPOD
	M.G. CAL. 30 M2
C 59337	LEG, REAR RIGHT
C 59337A	LEG, REAR RIGHT
C 59337B	LEG, REAR RIGHT

DO INSCRIBE PART NO.

TOLERANCE ON DIMENSIONS
NOT OTHERWISE SPECIFIED
DECIMAL ± .01
FRACTIONAL ± 1/64
ANGULAR ± —

DRAFTSMAN	TRACER	L'D'G DRAFTSMAN
H.A.	A.E.J.	
CHECKER	O.K.	CHIEF DRAFTSMAN
A.E.J.		

SUBMITTED:
A. W. Roe

APPROVED BY ORDER OF THE CHIEF OF ORDNANCE:
Welton J. Brooks
COL. ORD. DEPT., U. S. A.

ORDNANCE DEPT., U. S. A.

MADE AT ROCK ISLAND ARSENAL

A139965

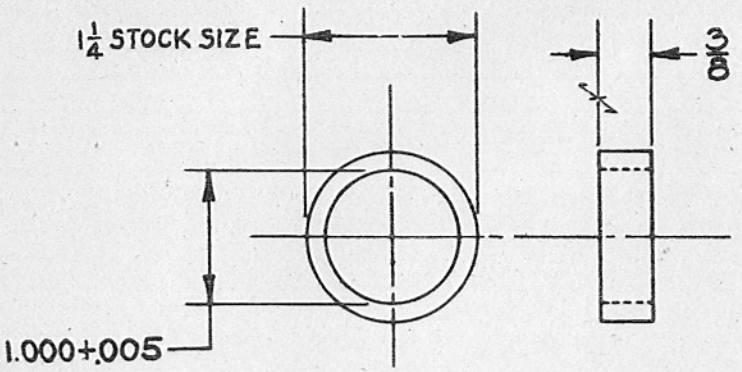

STOP, LEG, REAR (A139965)

STEEL WD1035

NOTE:
FOR ALTERNATIVE METHOD OF MFG., RING MAY BE FABRICATED FROM WD. 1010 FLAT STOCK (.015 MAX. OPENING) WELD CLOSED AT ASSEMBLY.

TOLERANCE $^{+.01}_{-.01}$ ALLOWED ON ALL DIMENSIONS UNLESS OTHERWISE SPECIFIED.

MANUFACTURING COMPONENT

SCALE 1/1 | A139965

PHYSICAL PROPERTIES	
Y. P.	
T. S.	
EL-2	
RED.	
HT. T.	
BR.	
SCL.	
C/C.	

JUNE 1, 1934

REVISIONS

1[2]	9-20-41		
2'	10-7-41		
3	8-26-42		
4	10-8-42		
5'	4-19-43		

DRG. PERTAINS TO

C59337	REAR LEG, RIGHT
C59338	REAR LEG, LEFT
D7052	MOUNT, TRIPOD, MACH. GUN, CAL. .30, M2
C59337A	REAR LEG, RIGHT
C59337B	REAR LEG, RIGHT
C59338A	REAR LEG, LEFT
C59338B	REAR LEG, LEFT

SYMBOL

AAS 513

DRAFTSMAN	TRACER	L'D'G. DRAFTSMAN
J.W.S.		
CHECKER		CHIEF DRAFTSMAN
C.A.C.		

SUBMITTED:

1ST LIEUT., ORD. DEPT., U. S. A.

APPROVED:

MAJOR, ORD. DEPT., U. S. A.

ORD. OFFICE, WAR DEPT.

A139974

HEAT TREATMENT & FINAL FINISH	PHYSICAL PROPERTIES					
	Y. P.		RED.		SCL.	
	T. S.		BR.			
	E. L. 2		ROCK			

JUNE 1, 1934

REVISIONS

5	11-17-42			
6'	4-19-43			
7'	5-3-43			
8'	6-8-43			

DRG. PERTAINS TO

C59337	REAR LEG, RIGHT
C59338	REAR LEG, LEFT
D7052	MT., TRIPOD
	M.G., CAL..30, M2
C59337A	REAR LEG, RIGHT
C59337B	REAR LEG, RIGHT
C59338A	REAR LEG, LEFT
C59338B	REAR LEG, LEFT

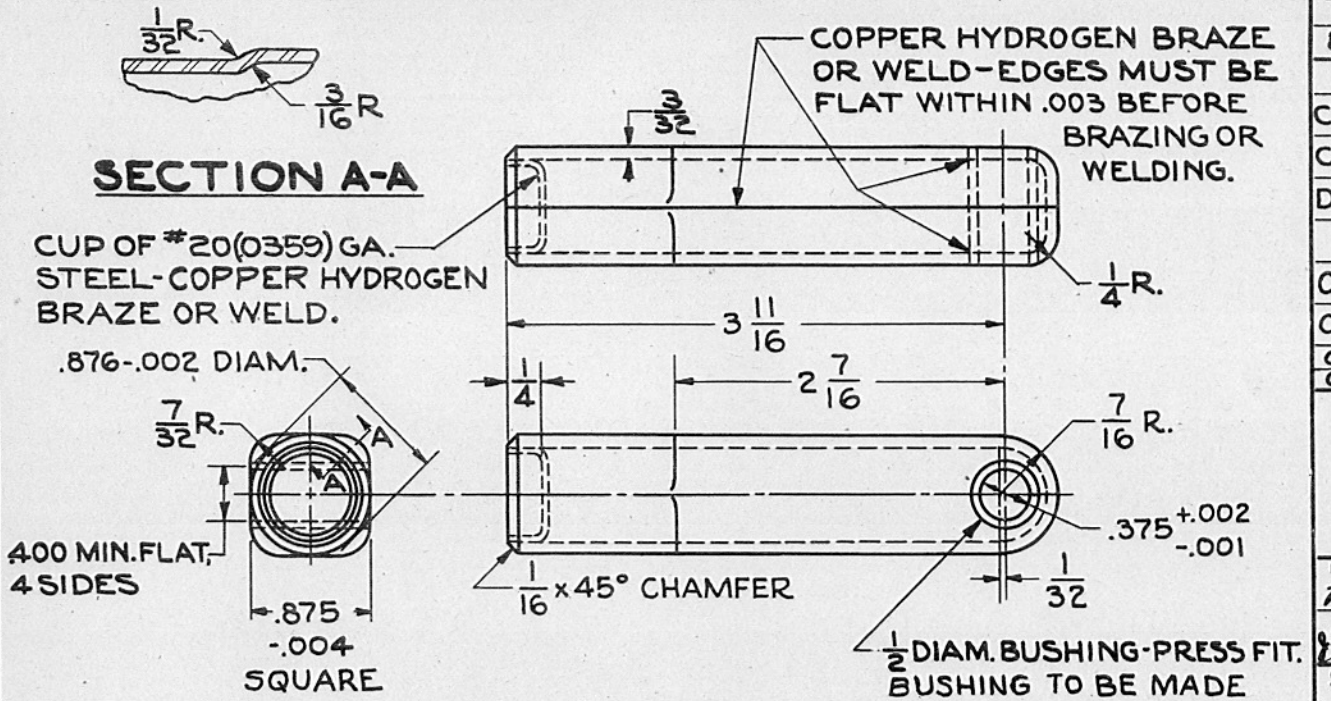

TOLERANCE ON DIMENSIONS NOT OTHERWISE SPECIFIED
DECIMAL ±.010
FRACTIONAL ± 1/64
ANGULAR ±5°

DRAFTSMAN	TRACER	L'D'G DRAFTSMAN
RMB	RMB	AHR
CHECKER: R.R.C. J.F.	O.O.	CHIEF DRAFTSMAN

SUBMITTED:
A.H. Roe

APPROVED BY ORDER OF THE CHIEF OF ORDNANCE
Geo. L. Turner
CAPT. ORD. DEPT., U. S. A.

ORDNANCE DEPT., U. S. A.

HINGE, LEG, REAR

WD1020 COLD ROLLED SHEET STEEL

MANUFACTURING COMPONENT

SUPERSEDES OLD TRACING A139974
UNDER REVISION DATE OF 11-17-42

SCALE 1/1

A139974

MADE AT ROCK ISLAND ARSENAL

A139997

HEAT TREATMENT & FINAL FINISH

PHOSPHATE BLACK

SPRING, SLEEVE LOCK

SPRING STEEL WIRE WD1085 (SPECIAL) CLASS A (A139997)

OUTSIDE DIA., NOT MORE THAN	.300
INSIDE DIA.,	.180
SOLID HEIGHT, NOT MORE THAN	.440
ASSEMBLED HEIGHT	.640
LOAD AT ASSEMBLED HEIGHT	12. LBS + 3. LBS.
DIA. OF WIRE APPROX.	.05
NUMBER OF COILS APPROX.	9.
ENDS CLOSED AND GROUND FLAT	

A139997

PHYSICAL PROPERTIES	
Y. P.	
T. S.	
EL.-2	
RED.	
HT. T.	
BR.	
SCL.	
C. C.	

JUNE 1, 1934

REVISIONS

1	6-25-36			
2	9-27-40			
3	9-21-42			
4'	1-27-43			
5'	4-19-43			

DRG. PERTAINS TO	
D-7052	MOUNT, TRIPOD, MACH. GUN, CAL. .30, M2
C59337	LEG, REAR, RIGHT
C59337A	LEG, REAR, RIGHT
C59337B	LEG, REAR, RIGHT

SYMBOL

PAS 630

DRAFTSMAN	TRACER	L'D'G. DRAFTSMAN
L.E.S.		
CHECKER		CHIEF DRAFTSMAN
C.A.C.	H.B.H.	

SUBMITTED:

Urban Mitts

1 ST LIEUT., ORD. DEPT., U. S. A.

APPROVED:

MAJOR, ORD. DEPT., U. S. A.

ORD. OFFICE, WAR DEPT.

A140004

HEAT TREATMENT AND FINAL FINISH

PHOSPHATE BLACK

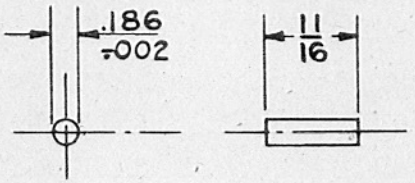

PIN, SLEEVE LOCK (A140004-2)

STEEL WD 1115

FINISH-f-

TOLERANCE ±.01 ALLOWED ON ALL DIMENSIONS UNLESS OTHERWISE SPECIFIED

SCALE 1/1

A140004

PHYSICAL PROPERTIES	
Y. P.	
T. S.	
EL-2	
RED.	
HT. T.	
BR.	
SCL.	
C. C.	

JUNE 1, 1934

REVISIONS			
1	6-25-36		
2'	5-19-39		
3'	2-18-41		
4	12-29-42		
5'	4-19-43		

DRG. PERTAINS TO	
C59337	LEG, REAR,
	RIGHT
D7052	MOUNT, TRIPOD,
	MACH. GUN,
	CAL. .30, M2
C59337A	LEG, REAR,
	RIGHT
C59337B	LEG, REAR,
	RIGHT

SYMBOL

0 AP 2088

DRAFTSMAN	TRACER	L'D'G. DRAFTSMAN
L.E.S.		
CHECKER		CHIEF DRAFTSMAN
C.A.C.	H.B.H.	

SUBMITTED:

1 ST LIEUT., ORD. DEPT., U. S. A.

APPROVED:

MAJOR, ORD. DEPT., U. S. A.

ORD. OFFICE, WAR DEPT.

A173361

HEAT TREATMENT & FINAL FINISH	PHYSICAL PROPERTIES					
	Y. P.		RED.		SCL.	
	T. S.		BR.			
	EL. 2		ROCK.			

NOV. 16, 1939

REVISIONS

1'	9-20-41		

DRG. PERTAINS TO

B108195	LEG, FRONT, ASSY.
C59337	LEG, REAR, RIGHT, ASSY.
C59338	LEG, REAR, LEFT, ASSY.
D7052	MOUNT, TRIPOD CAL. .30, M2.

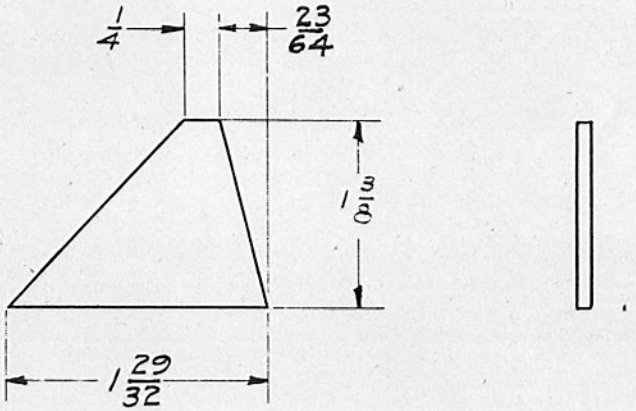

WEB

STEEL WD1010 OR WD1020

3/32 THICK

MANUFACTURING COMPONENT

TOLERANCE ±1/64 ALLOWED ON ALL DIMENSIONS UNLESS OTHERWISE SPECIFIED

SCALE 1/1

A173361

DRAFTSMAN	TRACER	L'D'G. DRAFTSMAN
JW.	JW.	
CHECKER	0.0	CHIEF DRAFTSMAN
BEG.		

SUBMITTED:-

MAJOR, ORD DEPT U S A

APPROVED BY ORDER OF THE CHIEF OF ORDNANCE:

LT. COL., ORD DEPT U S A

ORDNANCE DEPT., U. S. A.

MADE AT ROCK ISLAND ARSENAL

HEAT TREATMENT & FINAL FINISH

HEAT TREAT

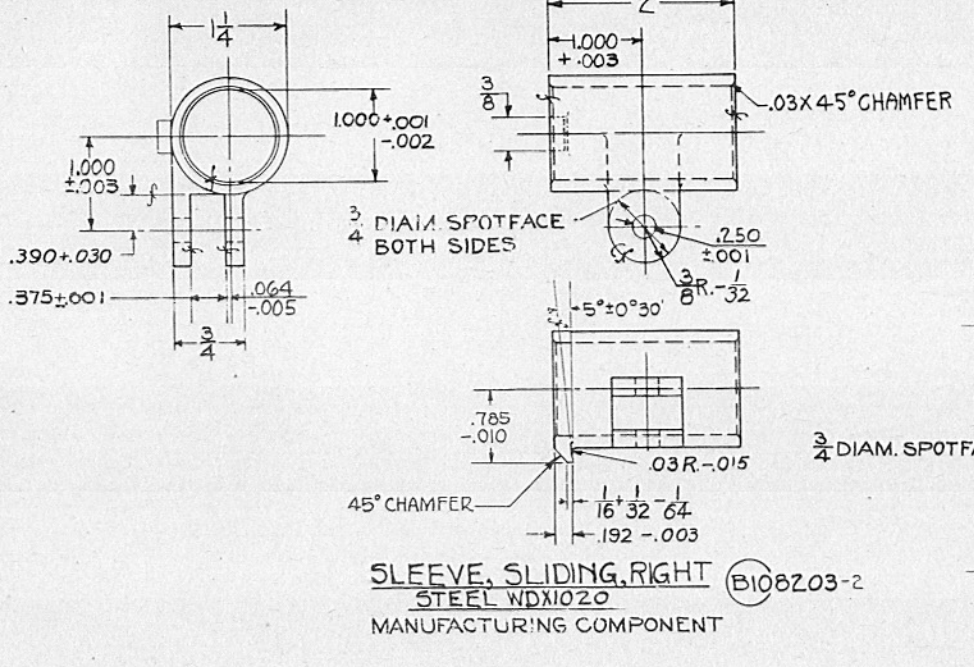

SLEEVE, SLIDING, RIGHT (B108203-2)

STEEL WDX1020

MANUFACTURING COMPONENT

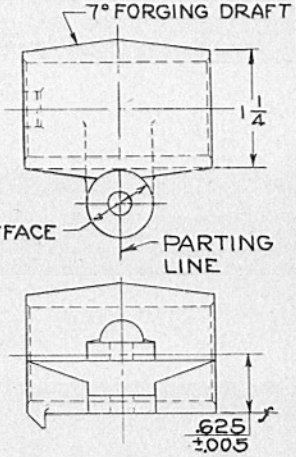

ALTERNATE METHOD OF MANUFACTURE

NOTE: FOR OTHER ALT. METHOD OF MFR. SEE B108203A

TOLERANCE $\pm\frac{1}{64}$ ALLOWED ON ALL DIMENSIONS UNLESS OTHERWISE SPECIFIED.

SCALE 1/1

B108203

PHYSICAL PROPERTIES		JUNE 1, 1934 REVISIONS			
Y. P.		1'	3-15-37		
T. S.		2[2]	10-13-38		
EL.-2		3'	7-18-39		
RED.		4'	2-25-41		
HT. T.		5'	4-2-41		
BR.		6	9-20-41		
		7'	12-1-41		
ROCK	A 78	8[2]	1-19-42		
	MIN.	9	4-10-42		
C. C.	.01 DEEP	10[2]	5-21-42		
		11[4]	10-8-42		
		12'	2-3-43		
		13[2]	4-19-43		

DRG. PERTAINS TO	
C59337	REAR LEG, RIGHT
D7052	MOUNT, TRIPOD, MACH. GUN, CAL. .30, M2
C59337A	REAR LEG, RIGHT
C59337B	REAR LEG, RIGHT

SYMBOL

HCS 464

DRAFTSMAN	TRACER	L'D'G. DRAFTSMAN
CHECKER		CHIEF DRAFTSMAN
C.A.C.		

SUBMITTED:

1ST LIEUT., ORD. DEPT. U. S. A.

APPROVED:

MAJOR, ORD. DEPT. U. S. A.

ORD. OFFICE, WAR DEPT.

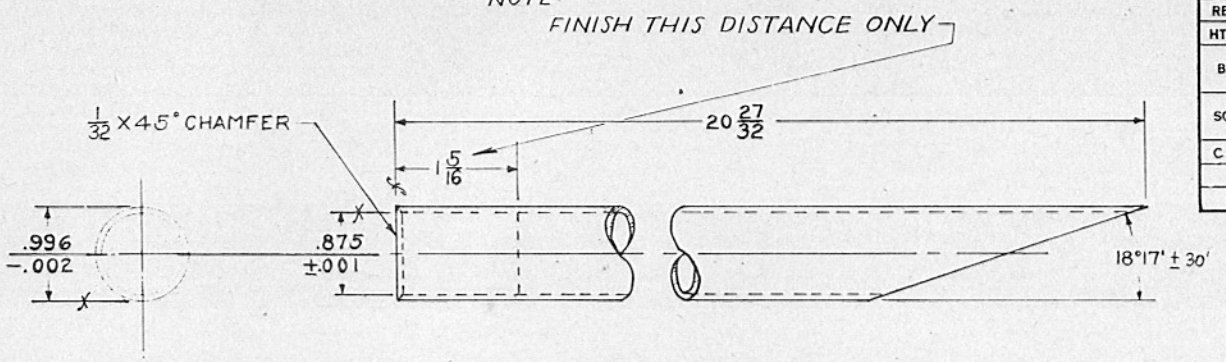

BODY, LEG, REAR

SEAMLESS STEEL TUBING WD1020

16 GAGE

MANUFACTURING COMPONENT

TOLERANCE +1/64 -1/64 ALLOWED ON ALL DIMENSIONS UNLESS OTHERWISE SPECIFIED.

SCALE 1/1

B108205

PHYSICAL PROPERTIES	
Y. P.	MIN. 40,000
T. S.	MIN. 55,000
EL.-2	MIN. 18%
RED.	
HT. T.	
BR.	
SCL.	
C. C.	

JUNE 1, 1934

REVISIONS			
1[2]	4-2-41		
2[2]	9-20-41		
3[2]	7-25-42		
4[1]	10-8-42		

DRG. PERTAINS TO	
C59337	LEG, REAR, RIGHT
C59338	LEG, REAR, LEFT
D7052	MOUNT, TRIPOD MACH. GUN, CAL. .30, M2

SYMBOL

OLB 476

DRAFTSMAN	TRACER	L'D'G. DRAFTSMAN
HAC		
CHECKER		CHIEF DRAFTSMAN
C.A.C.	HSH	

SUBMITTED:

1ST LIEUT., ORD. DEPT., U. S. A.

APPROVED:

MAJOR, ORD. DEPT., U. S. A.

ORD. OFFICE, WAR DEPT.

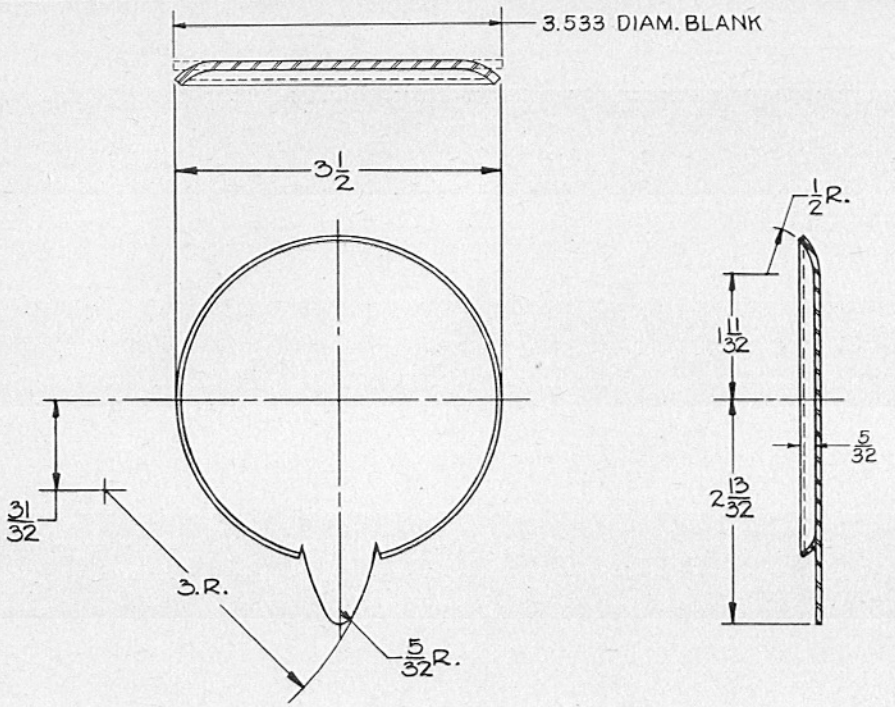

FOOT, LEG, REAR (B108458-1)

STEEL WD1020

3/32 - THICK

TOLERANCE + 1/64 − 1/64 ALLOWED ON ALL DIMENSIONS UNLESS OTHERWISE SPECIFIED

MANUFACTURING COMPONENT

SCALE 1/1 B108458

PHYSICAL PROPERTIES	
Y. P.	
T. S.	
EL.-2	
RED.	
HT. T.	
BR.	
SCL.	
C. C.	

JUNE 1, 1934

REVISIONS

1'	11-6-39			
2'	8-14-40			
3'	12-14-41			
4'	10-2-42			

DRG. PERTAINS TO	
C59337	LEG, REAR RIGHT
C59338	LEG, REAR, LEFT
D7052	MOUNT, TRIPOD MACH. GUN, CAL. .30, M2

SYMBOL

GDF 51

DRAFTSMAN	TRACER	L'D'G. DRAFTSMAN
C.O.		
CHECKER		CHIEF DRAFTSMAN
C.A.C.	H.B.H.	

SUBMITTED:

1 ST LIEUT., ORD. DEPT., U. S. A.

APPROVED:

MAJOR, ORD. DEPT., U. S. A.

ORD. OFFICE, WAR DEPT.

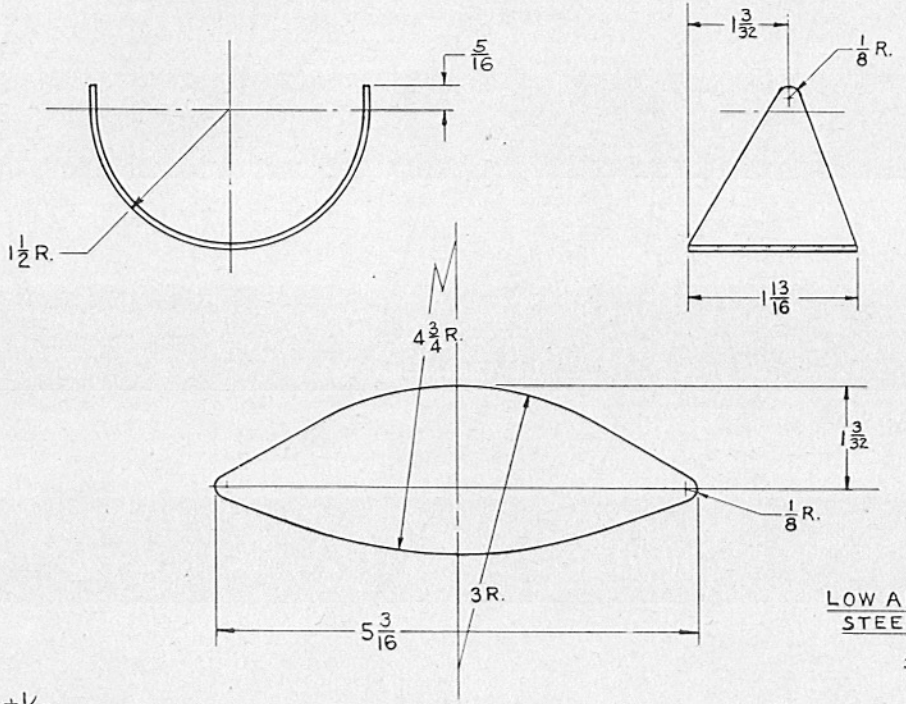

DEVELOPMENT

SPADE (C) B108633-1

LOW ALLOY STEEL GRADE-2
STEEL WD1010 CR. WD1020
3/32 THICK.

TOLERANCE +1/64 -1/64 ALLOWED ON ALL DIMENSIONS UNLESS OTHERWISE SPECIFIED

MANUFACTURING COMPONENT

SCALE 1/1

B108633

PHYSICAL PROPERTIES	
Y. P.	
T. S.	
EL.-2	
RED.	
HT. T.	
BR.	
SCL.	
C. C.	

JUNE 1, 1934

REVISIONS

1'	11-6-39			
2'	4-7-41			
3Z	9-20-41			
4'	10-7-41			

DRG. PERTAINS TO

B108195	LEG, FRONT
C59337	REAR LEG, RIGHT
C59338	REAR LEG, LEFT
D7052	MOUNT, TRIPOD MACH. GUN, CAL..30, M2

SYMBOL

JJS25

DRAFTSMAN	TRACER	L'D'G. DRAFTSMAN
R.C.V.		
CHECKER C.A.C.	11-6-39 H.C.H.	CHIEF DRAFTSMAN

SUBMITTED:

1 ST LIEUT., ORD. DEPT., U. S. A.

APPROVED:

MAJOR, ORD. DEPT., U. S. A.

ORD. OFFICE, WAR DEPT.

HEAT TREATMENT AND FINAL FINISH
- PHOSPHATE BLACK (SEE NOTE)

PHYSICAL PROPERTIES		JUNE 1, 1934 REVISIONS			
Y. P.		12	4-19-43		
T. S.					
EL. 2					
RED					
BR.					
ROCK.					
SCL.					

DRG. PERTAINS TO	
D7052	MOUNT, TRIPOD
	MACHINE GUN
	CAL. 30, M2

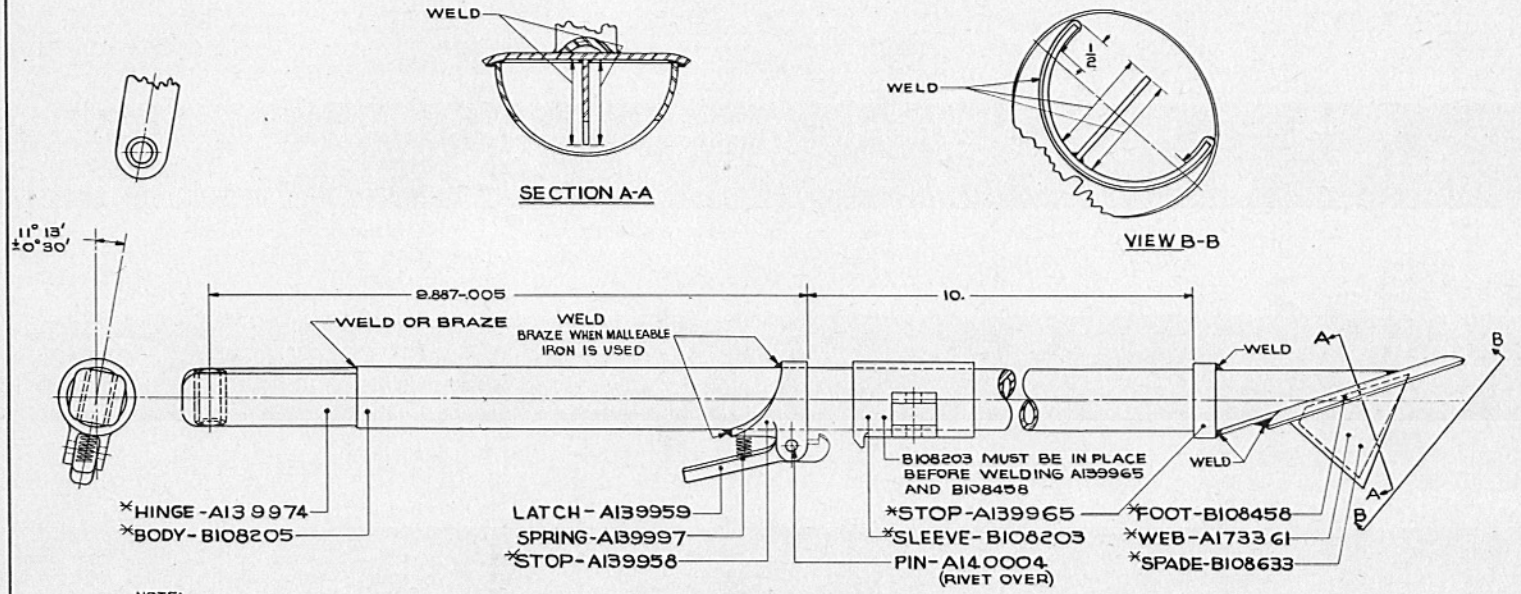

NOTE:
ASSEMBLE LATCH A-139959, SPRING A139997, AND PIN-A140004 AFTER APPLYING PHOSPHATE BLACK TO ASSEMBLY.

LEG, REAR, RIGHT, ASSEMBLY (C-59337-2

*WILL NOT BE ISSUED FOR FIELD MAINTENANCE EXCEPT AS COMPONENTS OF AUTHORIZED ASSEMBLIES

0 1 2 3 4 5 6 7 8 9 10 11 INCHES

RETRACED FROM OLD TRACING WITHOUT CHANGE 9-29-43

FOR ALTERNATIVE CONSTRUCTION SEE C59337A AND C59337B

C59337

TOLERANCE ON DIMENSIONS NOT OTHERWISE SPECIFIED
DECIMAL ±
FRACTIONAL ± 1/32
ANGULAR ±

DRAFTSMAN	TRACER	L.D.D. DRAFTSMAN
W.L.	H.N.S.	A.H.R.
CHECKER		CHIEF DRAFTSMAN

SUBMITTED: A.H. Roe

APPROVED BY ORDER OF THE CHIEF OF ORDNANCE
CAPT. ORD. DEPT. U.S.A.

ORDNANCE DEPT., U. S. A.

MADE AT ROCK ISLAND ARSENAL